DO NOT SCALE
IF IN DOUBT ASK

DRG.NO.	REV NO.
158880	R0

SCALE -1:1

ALL DIMENSIONS IN mm

TOL	mm
	0.080
	0.125
	0.25
	0.38
ANGLE ±	1°

STD. MACH.FINISH N8

GEOMETRIC TOLERANCE SYMBOLS

CHARACTRISTIC	SYM.
STRAIGHTNESS	—
FLATNESS	⏥
ROUNDNESS	○
CYLINDRICITY	⌭
PARALLELISM	//
SQUARENESS	⊥
RUNOUT	
POSITION	
CONCENTRICITY	◎
SYMMETRIY	⌯
M.M.C.	Ⓜ

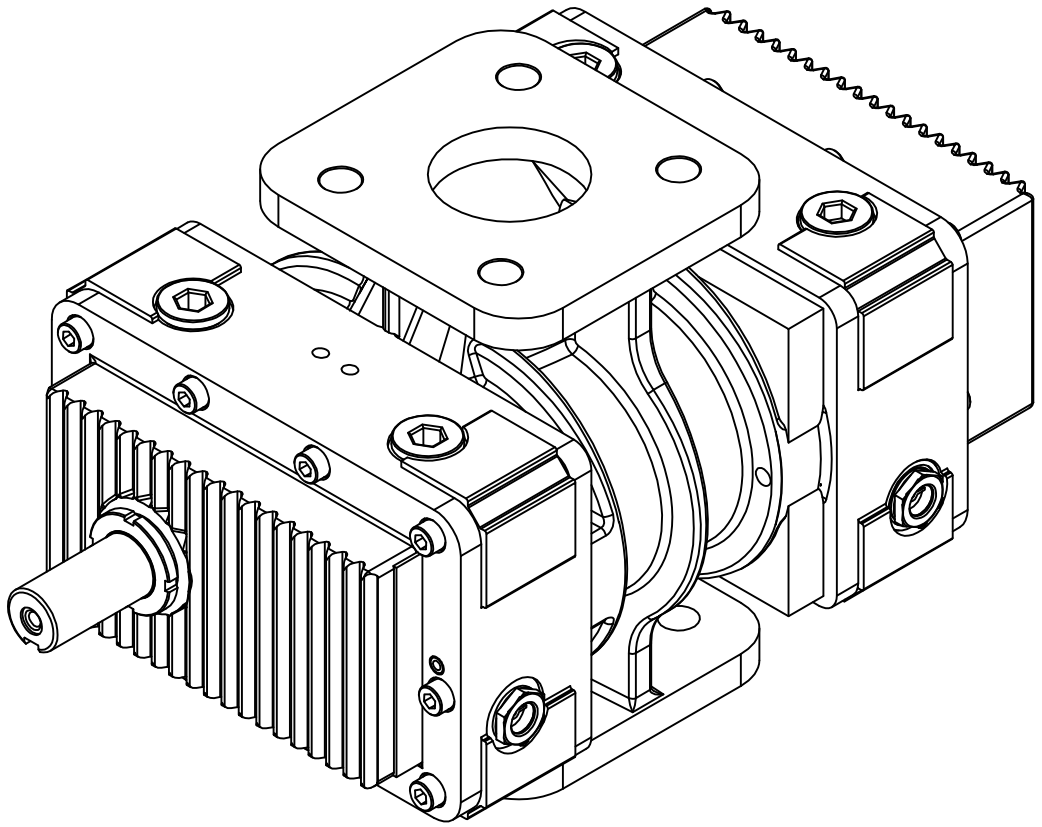

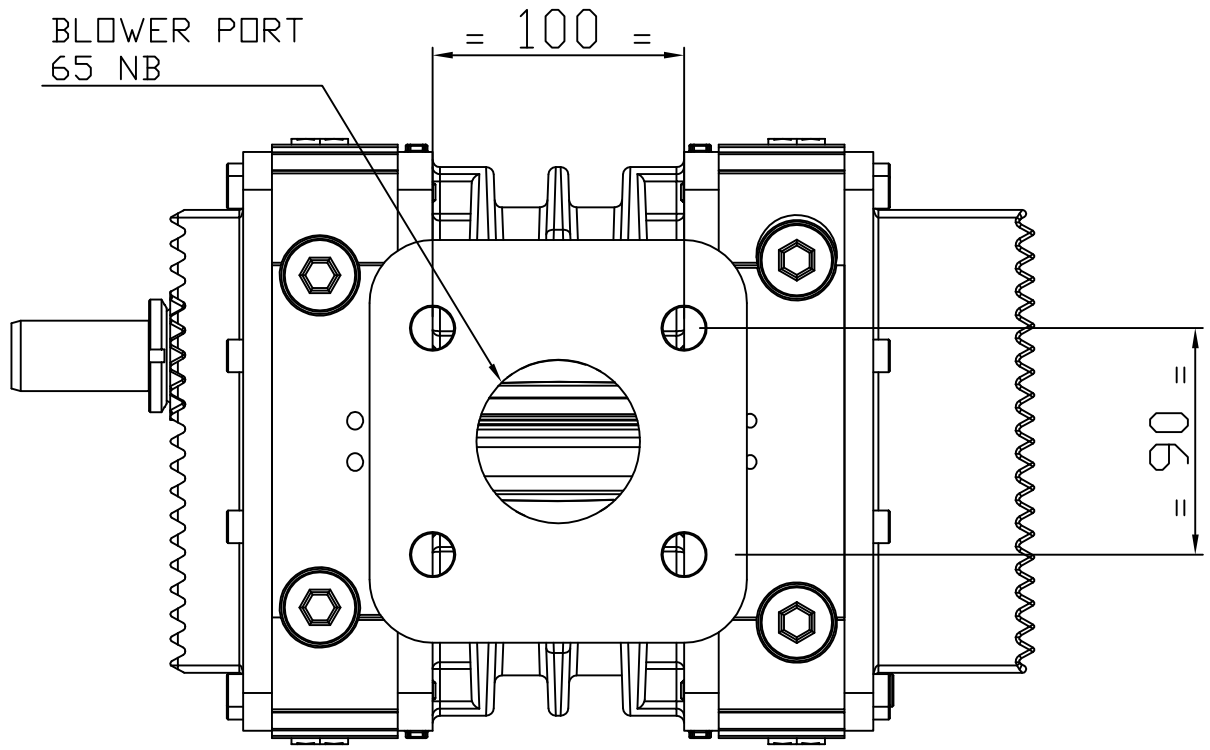

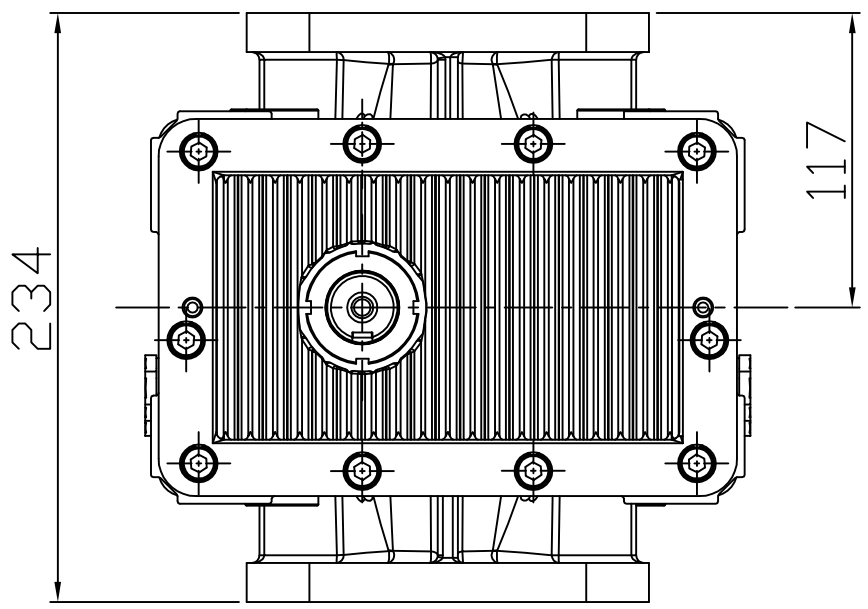

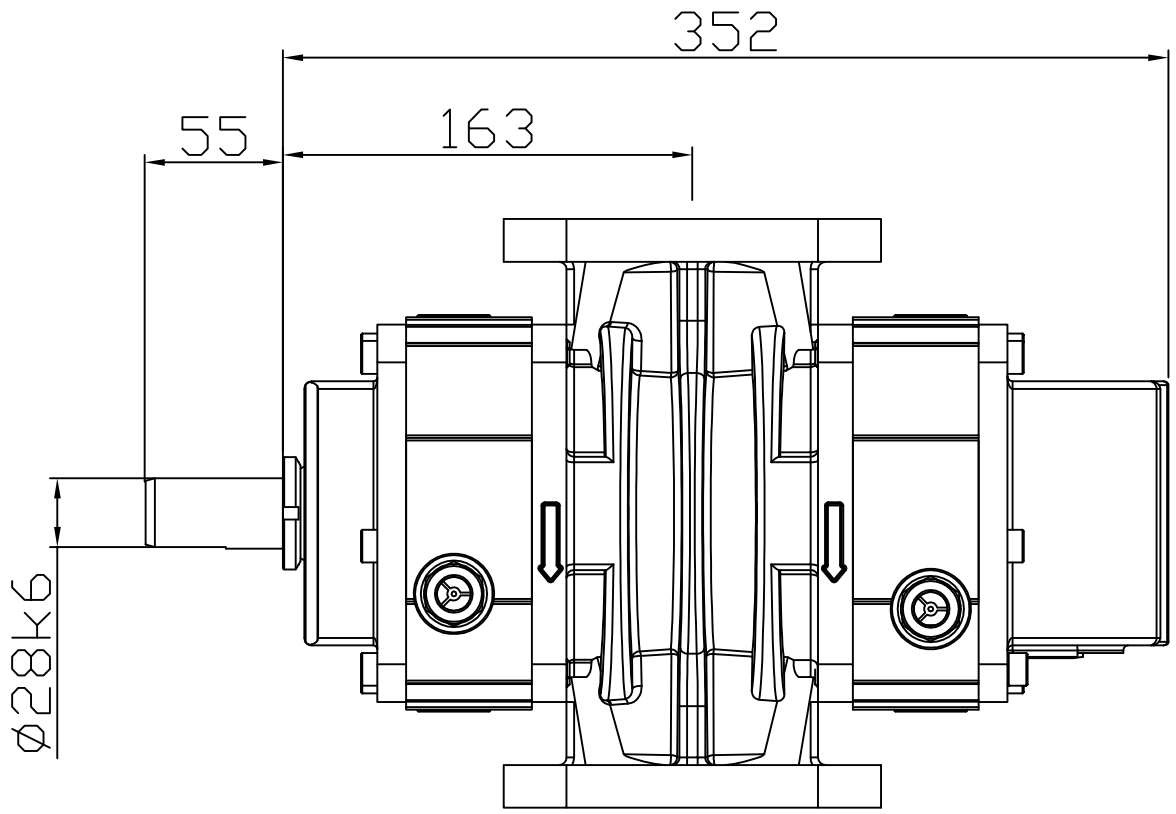

Hadron Engineering Ltd and is COPYRIGHT and the
information contained herein is
CONFIDENTIAL and the drawing and
information may not be reproduced or used
without the prior written consent of Hadron Engineering Ltd

ISSUE NO.	ECN NO.	DATE	APPD

DWG.	CKD.	APPD.
PRODUCT	DRG.NO. 158880	REV. R0

MATERIAL	
FINISH	
TREATMENT	

HADRON ENGINEERING LTD
Building 12 , Vantage Point Business
Mitcheldean, Gloucestershire GL17 ODD
United Kingdom

KTSR15 BARE BLOWER