HB1900

Hadron Engineering
The Blower Specialists

PERFORMANCE CRITERIA FOR HB1900 STATIC BLOWER/EXHAUSTER

For correct operation of this unit, the following maximum conditions must not be exceeded:-

Speed	5000 rev/min
Pressure difference across unit	1000 mbar
Pressure ratio across unit	2.0
Temperature rise across unit	140 deg C
Outlet temperature	170 deg C
Inlet temperature	50 deg C
Weight	215 Kgs
Shaft size	50 mm

This unit must not be run at speeds less than those given below (blower sea level pressure difference in brackets) :

1500 rpm at press. ratios up to 1.8	(800 mbar)
2500 rpm at press. ratios from 2.0	(1000 mbar)
4000 rpm at press. ratios from 2.0	(1000 mbar)
5000 rpm at press. ratios from 2.0	(800 mbar)

$$\text{Pressure ratio} = \frac{\text{Absolute outlet pressure}}{\text{Absolute inlet pressure}}$$

Normal (sea level) ambient conditions are 1013 mbar & 15 deg C.

A BLOWER is a unit in which the inlet pressure is substantially equal to the ambient pressure.

An EXHAUSTER is a unit in which the inlet pressure is significantly below the ambient pressure, although the outlet pressure might be above the ambient (as in “suck-blow” application).

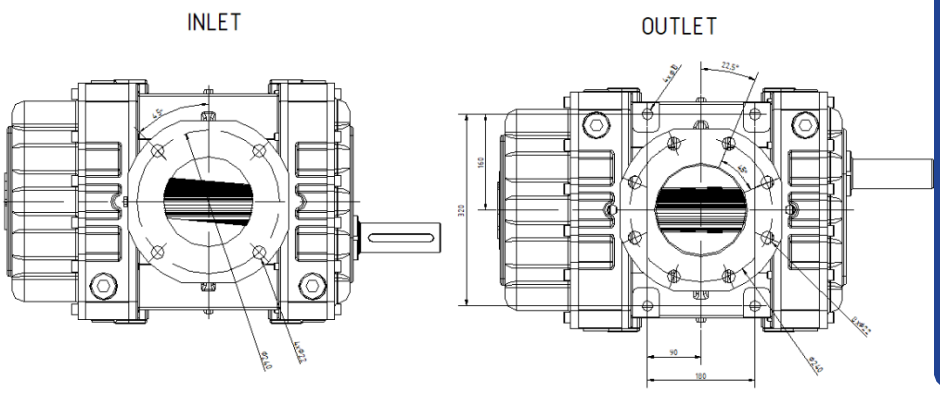

UNIQUE FEATURES

* Trilobe rotors with PTFE / carbon tip inserts for maximum airflow, maximum efficiency and fuel saving.
* Rigid construction.
* Channels in the case allow gradual equalization of pressure resulting in a smoother operation.
* Ground and hardened helical gears to ensure accurate phasing.

STANDARD FEATURES

The blower is suitable for direct coupling or vee belt drive throughout the performance range.

Oil lubricated at both ends.

Labyrinth and piston ring sealing with chamber open to atmosphere

HB1900 blowers and exhausters can be supplied as bare-shaft units or complete with motor, transmission equipment, baseplate, filters, silencers and a full range of accessories to meet requirements and duties specified.

SPECIFICATION

Casing: The main case and bearing housings are manufactured from high quality grey cast iron to EN GJL200.

Rotors: The rotors manufactured from EN GJS 500 7

Bearings: Oil lubricated deep ball bearing and double spherical roller bearing at the drive end and at the gear end double row angular contact ball bearing supports each shaft radially as well as providing axial location of the rotors.

Gears: Oil lubricated helical timing gears are hardened and ground for accuracy, long life and lowest possible mechanical noise level.

All blowers are individually tested. Test certificates will be issued if requested.
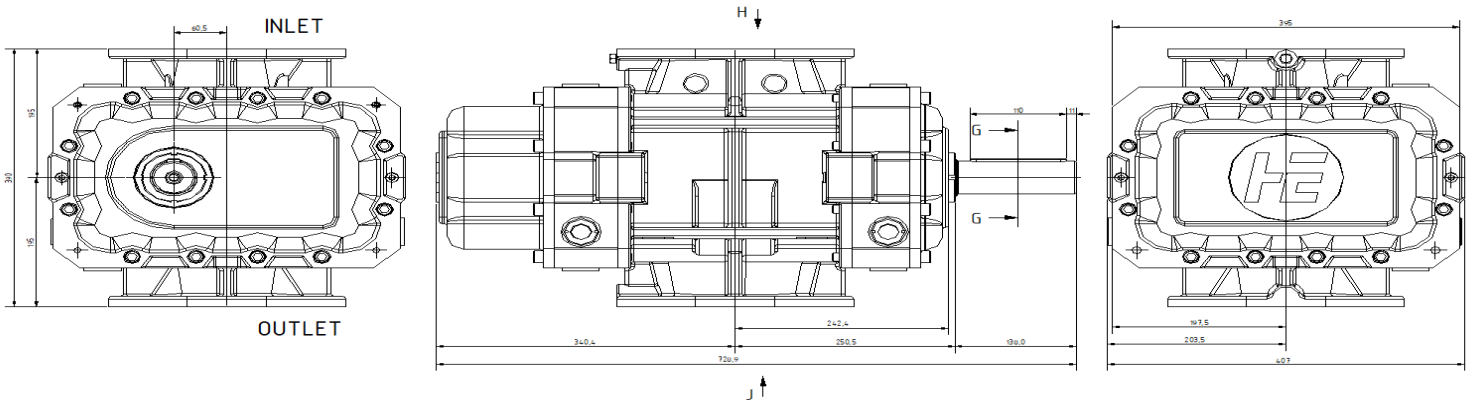
A comprehensive Installation and Operating Instruction folder is supplied with every blower.